91013nav

Foster/ NEPTUNE S. Lk Mich
Folger NPTN 91-1
May 15-24, 1991
NAVIGATOR'S LOG

91013nv2

Michigan

Foster/Folger

May 1991

RV Neptune

7530 - 00 - 286 - 6952
FEDERAL SUPPLY SERVICE

NPTN-1-91

NPTN 91-1 104791
91013

TABLE 8.—*U.S. State plane coordinate systems*—Continued

Lambert Conformal Conic projection—Continued

Zone	Standard parallels		Origin[5]	
			Long.	Lat.
Michigan (current)[4]				
North	45°29′ N.	47°05′ N.	87°00′ W.	44°47′ N.
Central	44 11	45 42	84 20	43 19
South	42 06	43 40	84 20	41 30
Minnesota				
North	47 02	48 38	93 06	46 30
Central	45 37	47 03	94 15	45 00
South	43 47	45 13	94 00	43 00
Montana				
North	47 51	48 43	109 30	47 00
Central	46 27	47 53	109 30	45 50
South	44 52	46 24	109 30	44 00
Nebraska				
North	41 51	42 49	100 00	41 20
South	40 17	41 43	99 30	39 40
New York[4]				
Long Island	40 40	41 02	74 00	40 30[5f]
North Carolina	34 20	36 10	79 00	33 45
North Dakota				
North	47 26	48 44	100 30	47 00
South	46 11	47 29	100 30	45 40
Ohio				
North	40 26	41 42	82 30	39 40
South	38 44	40 02	82 30	38 00
Oklahoma				
North	35 34	36 46	98 00	35 00
South	33 56	35 14	98 00	33 20
Oregon				
North	44 20	46 00	120 30	43 40
South	42 20	44 00	120 30	41 40
Pennsylvania				
North	40 53	41 57	77 45	40 10
South	39 56	40 58	77 45	39 20
Puerto Rico and Virgin Islands				
1	18 02	18 26	66 26	17 50[5g]
2 (St. Croix)	18 02	18 26	66 26	17 50[5f, g]
Samoa	14°16′ S.	(single)	170 00[5h]	-- --
South Carolina				
North	33°46′ N.	34 58	81 00	33 00
South	32 20	33 40	81 00	31 50
South Dakota				
North	44 25	45 41	100 00	43 50
South	42 50	44 24	100 20	42 20
Tennessee	35 15	36 25	86 00	34 40[5f]

X+ +2,000,000

See note ① mapping 6378206.4m & 1.0000382

Y+ +500,000

TABLE 8.—*U.S. State plane coordinate systems*—Continued

Transverse Mercator projection – Continued			
Zone	**Central meridian**	**Scale reduction[2]**	**Origin[3] (latitude)**
Georgia			
East	82°10′ W.	1:10,000	30°00′ N.
West	84 10	1:10,000	30 00
Hawaii			
1	155 30	1:30,000	18 50
2	156 40	1:30,000	20 20
3	158 00	1:100,000	21 10
4	159 30	1:100,000	21 50
5	160 10	0	21 40
Idaho			
East	112 10	1:19,000	41 40
Central	114 00	1:19,000	41 40
West	115 45	1:15,000	41 40
Illinois			
East	88 20	1:40,000	36 40 $K = 1 - \frac{1}{40,000} = .999975$
West	90 10	1:17,000	36 40
Indiana			
East	85 40	1:30,000	37 30 $K = 1 - \frac{1}{30,000} = .99996667$
West	87 05	1:30,000	37 30
Maine			
East	68 30	1:10,000	43 50
West	70 10	1:30,000	42 50
Michigan (old)[4]			
East	83 40	1:17,500	41 30
Central	85 45	1:11,000	41 30
West	88 45	1:11,000	41 30
Mississippi			
East	88 50	1:25,000	29 40
West	90 20	1:17,000	30 30
Missouri			
East	90 30	1:15,000	35 50
Central	92 30	1:15,000	35 50
West	94 30	1:17,000	36 10
Nevada			
East	115 35	1:10,000	34 45
Central	116 40	1:10,000	34 45
West	118 35	1:10,000	34 45
New Hampshire	71 40	1:30,000	42 30
New Jersey	74 40	1:40,000	38 50
New Mexico			
East	104 20	1:11,000	31 00
Central	106 15	1:10,000	31 00
West	107 50	1:12,000	31 00
New York[4]			
East	74 20	1:30,000	40 00
Central	76 35	1:16,000	40 00
West	78 35	1:16,000	40 00
Rhode Island	71 30	1:160,000	41 05
Vermont	72 30	1:28,000	42 30

APPENDIX C
STATE PLANE COORDINATE SYSTEMS—CHANGES FOR 1983 DATUM

This listing indicates changes for the NAD 1983 datum from projections, parameters, and origins of zones as described in table 8 for the NAD 1927 datum. It is important to understand that State plane coordinates based on the datum *cannot* be correctly converted to coordinates on the 1983 datum merely by using inverse formulas to convert from 1927 rectangular coordinates to latitude and longitude, and then using forward formulas with this latitude and longitude to convert to 1983 rectangular coordinates. Due to readjustment of the survey control networks and to the change of ellipsoid, the latitude and longitude also change slightly from one datum to the other.

These changes have been approved by the National Geodetic Survey (William M. Kaula, James Stem, pers. comm., 1986). They are given in the same order as the entries in table 8, except that *only the changes are shown.* All parameters not listed remain as before, except for the different ellipsoid and datum. Because all coordinates at the origin have been changed, and because they vary considerably, they are presented in the body of the table rather than as footnotes. Samoa is not being changed to the new datum.

[L *indicates Lambert Conformal Conic*]

Area	Projection	Zones
California	L	6
Montana	L	1
Nebraska	L	1
Puerto Rico and Virgin Islands	L	1
South Carolina	L	1
Wyoming	Unresolved	

Transverse Mercator projection

Zone	Coordinates of origin (meters) *x*	*y*	*Other Changes*
Alabama			
East	200,000	0	
West	600,000	0	
Alaska, 2–9	500,000	0	
Arizona, all	213,360	0	Origin in Intl. feet[1]
Delaware	200,000	0	
Florida			
East, West	200,000	0	
Georgia			
East	200,000	0	
West	700,000	0	
Hawaii, all	500,000	0	
Idaho			
East	200,000	0	
Central	500,000	0	
West	800,000	0	
Illinois			
East	300,000	0	
West	700,000	0	
Indiana			
East	100,000	250,000	
West	900,000	250,000	
Maine			
East	300,000	0	Lat. of origin 43°40′ N.
West	900,000	0	
Mississippi			
East	300,000	0	Scale reduction 1:20,000, Lat. of origin 29°30′ N.
West	700,000	0	Scale reduction 1:20,000, Lat. of origin 29°30′ N.

Lambert Conformal Conic projection			
	Coordinates of origin (meters)		
Zone	*x*	*y*	*Other changes*
Alaska, 10	1,000,000	0	
Arkansas			
North	400,000	0	
South	400,000	400,000	
California			Zone 7 deleted.
1–6	2,000,000	500,000	
Colorado, all	914,401.8289	304,800.6096	
Connecticut	304,800.6096	152,400.3048	
Florida, North	600,000	0	
Iowa			
North	1,500,000	1,000,000	
South	500,000	0	
Kansas			
North	400,000	0	
South	400,000	400,000	
Kentucky			
North	500,000	0	
South	500,000	500,000	
Louisiana			
North	1,000,000	0	Lat. of origin 30°30′ N.
South	1,000,000	0	Lat. of origin 28°30′ N.
Offshore	1,000,000	0	Lat. of origin 25°30′ N.
Maryland	400,000	0	Lat. of origin 37°40′ N.
Massachusetts			
Mainland	200,000	750,000	
Island	500,000	0	
Michigan			GRS 80 ellipsoid used without alteration.
North	8,000,000	0	
Central	6,000,000	0	Long. of origin 84°22′ W.
South	4,000,000	0	Long. of origin 84°22′ W.
Minnesota, all	800,000	100,000	
Montana (single zone)	600,000	0	Standard parallels, 45°00′ and 49°00′ N. Long. of origin 109°30′ W. Lat. of origin 44°15′ N.

~~(3) Code4~~	~~J~~	~~1411280~~	~~219805~~	~~70~~	yes
~~(2) Code2~~	~~J~~	~~1411280~~	~~219805~~	~~70~~	
~~(2) Code2~~	~~I~~	~~1399760~~	~~199765~~	~~25~~	yes
~~(2) Code3~~	~~J~~	~~1411280~~	~~219805~~	~~70~~	
~~(3) code4~~ ~~(3) code3~~	~~J~~	~~1411280~~	~~219805~~	~~70~~	
(4) code3	I	1399760	199765	25	
(3) Code4	D	1361940	137155	35	

70' Elevat.
J. N 219 805
W 1,411,280

X 1369990
Y 143990
Elev. 15 feet
Code 3

N 156740
E 1381085
Elev. 10
Code 4

code 3

K =
N = 234,780
E = 1,419,055
Elev 40 feet

N = 182200
E = 1,393,103
Elev. 60
Code 4

Woko Beach
N 169335
E 1399270
Elev. 15
Code 3

N = 221 145.
E = 1,412,015
El. 70 code 4

Site

(1) Code2	Scape	x 1,300,993.95	y = 94533.81	100'
~~(2)~~ Code3	Line A	x = 1,320,195	y = 104,935	20'
~~(2)~~ Codes3	line B	x 1,331,~~310~~ 355	y 111,~~855~~ 810	25'
(2) ~~[illegible]~~	line B2	x 1,340,060	y 117,845	6'
(3) Code4	line C	x 1348555	y 124475	35'
~~(2) Code3~~	lin D	x 1,361,940	y 137155	35
~~(2)~~ Code3	lin E	1,369,550	143,990	15
(3) Code4	line F	1381085	156740	10
(2) Code3	line G	1388270	169335	15
(3) Code4 3/20/11	line H	1393103	182208	60
~~(2) Code3~~	lin I	1399760	197765	25
~~(3) Code4~~	line I2	1403035	205810	20
~~(2) Code3~~	line J	1411280	219805	70
~~(3) Code4~~	~~line K~~	1412015 ~~1419055~~	221145 ~~234975~~	70 ~~40~~
(4) Code5	Hotel	1417066	230003	125
~~(2) Code3~~	~~K~~	1419055	234780	40
~~(3) Code4~~		~~1415055~~	~~234975~~	40
~~(3) Code4~~	I2	1411280	219805	70
~~(2) Code3~~	I	1399760	197765	25

5/16/91 Cal - Range (900.92-900.98) setup from ship to shorepoint
Boat moving slightly
90 ft
w/EDM TAS/RACE

(AV 50 readings)

		RT1	SNR	RT2	SNR	
Code 2	*	48.1	70	37.0	90	
		39.1		—		Bust
radio see below		37.9	69	24.4	77	
		33.4		26.0		
		41.9	73	31.1	86	
	*	45.2	77	35.8	95	Good

*AV

Code 3	13.4	12.8	74	3.2	3.0	81
	12.2		73	2.8		86
Code 4	97.0	96.4	82	86.5	85.8	93
	95.9		82	85.5		93
Code 5	2.5	1.1	82	-8.1	-9.7	96
	1.0		82	-9.9		95
	-.3		82	-11.2		96

Code 2 (again)

~~49.6~~	77	37.7	37.6	96
49.7	78	37.5		96

(old reading from PR)

Code 2	47.0	39.4
Code 3	11.7	2.7
Code 4	34.7	26.1
Code 5	.6	-9.3

NADCON DATUM SHIFT 83 to 27

@ 41 44 86 57

.137 sec lat	.115 sec long
4.2 m	2.6 m

83 to 27

go south smaller lat
go east smaller long

Nuke plant GPS Position for diff GPS m on 5/23/91

Phon con from Tagg on 6/4/91

41 58 24.11121
86 34 04.30979
HA 147.799 meter
ANT 11" above mark = .2794 meter

5/15/91 Day 135

Morning - afternoon - rob Neptune

1445 Dep Chi

Transit to Michigan City Jon.

1845 ARR

5/16/91 Day 136 (Z+5) Central ~~EDS~~ time Michigan City
NTPN-1-91
R/V NEPTUNE

0745 ARM Dock

0830-0930 Cal minirangers
Dick / put in range w/ SDM 901 ft
cals Cods 2, 3, 4, 5

(~~local~~)
1839 Dep Dock (1339 local)
1930 Deploying gear - 3.5, ODM, SS, DS7000

2128 SOL 1	S3.14 @ 147	SR 76.6 meters
2135	out on SS	SR 84.6 meters
2145	in on SS	SR 74.1 meters
2152	S/C ↑3.6	SR 74.7 meters
2210	in on SS	SR 66.5 meters
2213	in on SS	SR 64.1 meters
2218	in on SS	SR 62.0 meters
2233	lost Station A	
2236	in on SS	SR 55.2 meters
2237	switch to GPS	
2238	in on SS	SR 51.0 meters
2238	MR Back ON	~~SR 51.0~~ Sta A off? Raining dno
2240	MR Down ↓ GPS ON	
2245	in on SS	SR 49.5 meters
2249	in on SS	SR 48.4 meter
2251	MR BACK ON	
2251	in on SS	SR 46.0
2252	lost Sta A	
2256	MR BACK ON	TAG WIGGLED CABLES
	?? ON & OFF AGAIN - RAINING SLIGHTLY ON SHORE	
	was Raining Heavy	
2300	GPS ON	unplugged MR
2305	in on SS	SR 45.0
2315	MR ON	
	in on SS	SR 41.5
2317	fish in	SR 37.1
2318	fish in	SR 37.2
2319	fish in	SR 38.3

5/16/91 Day 136 continued

2320 fish in SR 37.4 Closing on shore
2321 EOL 1

0015 ARR Dock (7:15 P) (Central time)

5/17/91 Day 137 (Z+4 DST)

NTPN-1-91
R/V Neptune

11:45 ARR BOAT (07:45 A)
12:40 DEP Dock (08:40 A)

1420 SOL 2 S 3.6 C143 SR (now) on floppy (lancer to fish)
1441 Port side fish (gone Democratic)
1403 found problem - bad splice in deck cable (wiggled cable)
1506 fish in
1516 fish in
1543 3 station weak signal msg BS
1544 lost B
1548 switch to GPS
1553 MR BACK ON
1558 switch to GPS
1559 MR BACK ON
1609 EOL 2

1700 SOL 3 line C S 2.7 C319 Seas building & on the bow
1803 port side 2 ONLINE using 3 sta now - not coming in
1854 EOL 3

1900 Breaking off for today - getting too rough (3')
2035 ARR Dock (4:35 P)
2300 Dep Boat worked on streamer & deck cable setup

5/18/91 Day 138 Z+4 ~~[illegible]~~ (DST)

MPWT-1-91
R/V Neptune

12:00 ARR Boat (8P)
1300 Dep Dock Wind down but swell from NW
1345 ARR Dock (Too Rough)

Worked on syst & data types (Finstein) til 2P
Ret 5407 to help Dick w/ Krupp syst.

5/19/91 Day 139 Z+4 DST NPNT-1-91
Neptune

10:30 ARM Boat 6 30 A
11:20 Dep Dock 7 20 A

1235 diff Asht - MR xy 631.5 -348.1
~~41 53.1220 86 47.8059~~ GPS ~~1329287/150804~~ MR
41 53.6564 86 47.2179 1331401 154125
diff 562 -334 → 53.8038 47.1193 1331955 154753

1302 Slant Range on raw (no correction) (9 02 A)

Possible bad MR station co-ordinates

1323 SOL4 S4.5 C133 line D SR 69.4m Depth 31.9m
1439 EOL4 SR 26.0 Depth 5.7

1512 SOL5 S3.8 C311 line E SR 27.0 Depth 6.5
1514 diff -67 -62 (GPS - MR)
1515 MR acting up AS fixes jumpy → Scarp - too close to shore?
1517 MR Back on ok
1611 diff -13 -32
1636 EOL5

1705 NAV CRASH DISC NO EOF data ends 1700
Reboot / new disc

1709 new MR STA GPS diff 12.2 -12.2

1717 SOL6 S4.5 C123 line F GPS diff -24/19.0 SR43 Depth 33
1829 EOL6
↓
1829 SOL7 S4.2 C028 tie line along shore
1833 Switch GPS only one cable must take MR sta down
1852 Switch MR GPS diff -1200 -1200 bad
1853 Switch back to GPS
1900 EOL7

not using MR

5/15/91 Day 139 Continued

1900 SOL 8 (11/12) S 4.1 C 256 (line G) GPS SR 27 No depth
1910 Switch Back MR ~~MR off~~
Solution on wrong side of baseline diff -34 -5
depth back (on) with MR positioning
1940 diff -63 0
2016 EOL 8
2016 SOL 9 (12/13) transfer to line H S 4.1 C 037 on GPS
2038 Switch MR ON diff -12 -33
2048 EOL 9
| SOL 10 (13 to 14) S 4.3 C 111 line H
2151 EOL 10 GPS diff -45 ~~[illegible]~~

2208 Heading to St Joseph, Mi (6:08P)
2315 ARR St Joseph (7:15P)

RT 40 mi city to Truck & Trailer (10:45P)

Prg Chan - graph screen last fx -
Astitech diff P/O shorten to oslt/

5/20/91 Day 140 Z+4 DST NPNT-1-91
Neptune

1210 ARR BOAT (8^10A)
1245 Dep Dock

1500 3.5 Burned up?? Prog RS232 into Laptop for test
MR using Hotel & line I Scarp & I2 not being received

MR STA Hotel ↑↓ - starting line on GPS

1520 SOL 11 S4.2 C293 line I GPS (No depth) Rec
1521 ODEM Depth Recorded on LAPTOP
1527 Switch back to MR diff -27.8 -95.6 depth ON
Scarp & I diff -19.4 -93.7
1543 NAV Crash DISC #1 NO EOF
1547 ON LINE NAV
1550 NAV CRASH AGAIN ???
1554 ON LINE
1557 NAV CRASH → 1603 first time on Disc #2
1610 ON LINE Dual FREQ ODEM making DS7000 to output
a plethora of data need reset gain to 3
Disabled C (I^2 sta) on MR diff 7.9 -52.5
1618 Changed MR STA using I, I^2, Hotel diff 1.7 9.2
SCARP out of solution - (err SRR gone)!

1628 EOL 11
↳ SOL 12 S4.0 C010 transfer to line I^2
1654 < EOL 12
SOL 13 S4.0 C114 diff -14 15
1700 ABORT 13 DON = 1300 SS acting up signals NG
1718 HOVE TOO - taking on spares from shore boat folger & Happy time
1748 SR disabled working on SS & 3.5 transponder removed
1800 Heading back toward line
1814 SOL 13 S4.2 C115 line I2 Restart no SR DON = 1728 @ 30m Depth
1817 diff -.9 -34
1835 3½ kHz BACK ON
1839 MR no solution switch GPS I^2 + Hotel not being received
1843 MR BACK ON but jumpy

5/20/91 Day 40 Continued

1844 diff 19 - 29
1900 MR no solution switch to GPS getting closer to shore
1916 < EOL 13 (4 to 5)
SOL 14
1919 GPS PDOP too HIGH NO NAV
1927 PDOP 2 NAV GPS ok MR still not rec BOC
1943 New STA for J site 2 entered, MR ON line
1944 diff -1 25
1949 > EOL 14 (5 to 6)
SOL 15 S 3.5 C294 line J diff 18/19
2057 > EOL 15
SOL 16 (6 to 7) S 4.4 C019 transfer to K
2122 diff 10 22
2138 > EOL 16 (7 to 8)
SOL 17 S 4.2 C111 line K diff 85 101 (PDop 7)
2208 MR no solutions on/off
2221 Sta on K on power cable prob diff 3 23 PDop 15
2235 diff 26 38 PDop 2
ODEM data time -4 sec's so ADD 4 sec to data time
ie 2230 really is 2234
2254 EOL 17 (6 54 P)
short run to St. Joseph's
2325 ARR Dock (7 25 P)

last fx ? left 5 +4 space in CRT graphics ? of SR

5/21/91 Day 141 2+4 EDT NPNT-1-91
Neptune

1115 ARR Boat (715A)
1212 Dep Dock

1308 Sorting out NAV (MR sta locations) using B/C I & Hotel
diff -80 24 (PDOP 22)
1330 SOL 18 (1+02) S4.3 C115 ~~diff~~
1401 diff 35 -1 PDOP 1
1405 EOL 18

1408 SOL 19 (3+04) S4.4 C255 switch to GPS, lost MR sta @
No NAV started @ DON=99
too close to shore for MR
1434 ABORT 19 Qmips problem Rng = ~1000m data not recording
Have too
1534 NAV CRASH (no data 1500 to 1621 on disc)
1621 ~~Restart using orig disc~~ - ~~nothing~~ note data gap
1649 SOL 19 (4+03) (ReRun) S4.5 C115
1652 Qmips REBOOT SAME problem w/ tape drives
ABORT
1730 Transit to ReRun line I w/ 3.5 sept. (130?)
1812 Starting line on GPS - MR too close to base line to solve
1816 SOL 20 (13+14) S4.1 C293 line I ReRun w/ 3.5
1827 switch to MR diff 2.3 -7.8 PDOP 2
using I & Hotel
1917 EOL 20
SOL 21 transfer to line H2 diff 17-28
1931 switch MR stations H2 & Hotel diff 60 -90 PDOP 2
1935 EOL 21

1940 SOL 22 15+16 S5.2 C118 line H2
2029 EOL 22

2047 SOL 23 17+18 S4.2 C027 Tie line MR STA I & Hotel
MR SPOTTY (close to shore & baseline)
2059 switch MR sta I & Hotel still on GPS
2103 switch to MR diff 52/78

5/21/91 Day 141 continued

2104 line 23
2219 Enabled MR Sta @ K, I, Hotel def-3/111 PDOP14
~~2224~~
2224 Switch GPS - losing MR stations I + ~~K~~
2240 MR BACK ON
2241 EOL 23 MR Down GPS on (6:42P)

2315 ARR Dock (7:15P)

5/22/91 DAY 142 Z+4 EDT

NPTN-1-91
R/V Septune

1120 ARR BOAT
1150 Dep Dock (7 50A)

(MOSAIC LINE J) (Code 345)

1245 (1+02) SOL 24 S4.5 C114 using MR sta I J Hotel SR ON
diff 16 PDOP 1

1319 EOL 24

1321 (3+04) SOL 25 S4.3 C294 diff 26 20 PDOP 32
1356 EOL 25

1400 (5+06) SOL 26 S4.5 C114
1433 EOL 26

1435 (7+08) SOL 27 S4.4 C295
1510 EOL 27

1518 (9+010) SOL 28 S4.5 C114 diff 40-37 PDOP 2 3SV
1552 EOL 28

1554 (11+012) SOL 29 S4.0 C294
1618 switch GPS MR sta out I & J
1620 MR ON
1620 JPS - unplug MR until more stable
1624 MR ON
1630 EOL 29
1640 Velocimeter drop
1647 moving to 2nd MOSAIC AREA (LINE I)

1736 (1+02) SOL 30 S4.3 C114 MR main I & Hotel w/ Scarp
1812 EOL 30 → diff -20 -70 PDOP 8

1823 (3+04) SOL 31 S4.5 C293 MR acting up near shore
1900 EOL 31

5/22/91 Day 142 continued

1907 (5+06)	SOL 32	S4.4 C 114		MR off/on
1942			Switch GPS	near shore lost Hotel
1943			MR Back	
1944	EOL 32		Switch GPS	LSV PDOP2
1946 (4+08)	SOL 33	S4.2 C 294	GPS	
1947			MR ON	diff 8 17 PDOP2
2022	EOL 33			
2030 (4+10)	SOL 34	S4.5 C 113	MR ON (closing well)	offshore
2102			Switch GPS	
2103			MR	
2105	EOL 34		last fix GPS	(505P)
2745	Ark Dock	Mi City		(745P)

4145 8151

5/23/91 Day 143 Z+4 EDT

NPTN-1-91
R/V Neptune

1130 ARR BOAT (7:30A)
1152 DEP Dock

1247 (H+2) SOL 35 S4.5 C058 on GPS only getting one NR (Scarp) (long tie line)
1311 GPS Down still no MR sticky D.R.
1315 GPS PDOP 77 ~ 45 & coming down
1321 (2+3) S4.9 C054 GPS PDOP 17 dogleg
1350 PDOP 4
1355 no MAV
1443 (4+05) GPS ON SV3 PDOP 3 S5.2 C050
1453 (5+06) S5.1 C040
1528 (6+07) S5.4 C030
1551 (7+08) S5.2 C018 GPS SV3 PDOP 2
1633 EOL 35

Transit to small Mosaic 10 min @ 216°
Code 3 moved to D
1714 MR ON diff -758/628
Mosaic @ D
1807 SOL 36 MR using D & Scarp S4.8 C134 diff 285/-268 SV3 PDOP 2
1822 EOL 36

1823 SOL 37 S 4.9 C315 Diff GPS TAG @ Power Plant.
1837 EOL 37

1842 SOL 38 S5.1 C134
1852 EOL 38 (257P)

END.
Transit to Muskegon City
1903 Crash

2045 ARR Dock (445P)

Aft

Port

Fore

Star

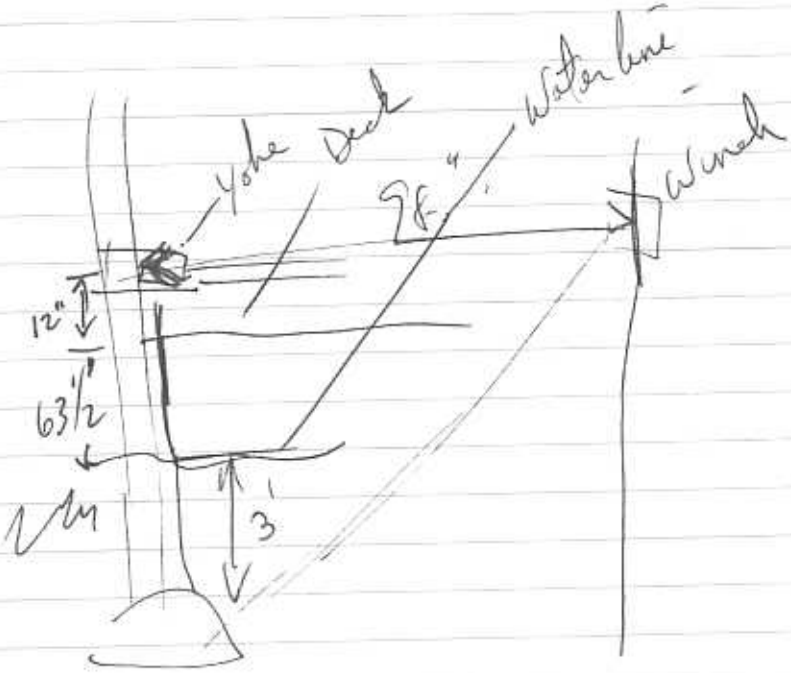

Fore

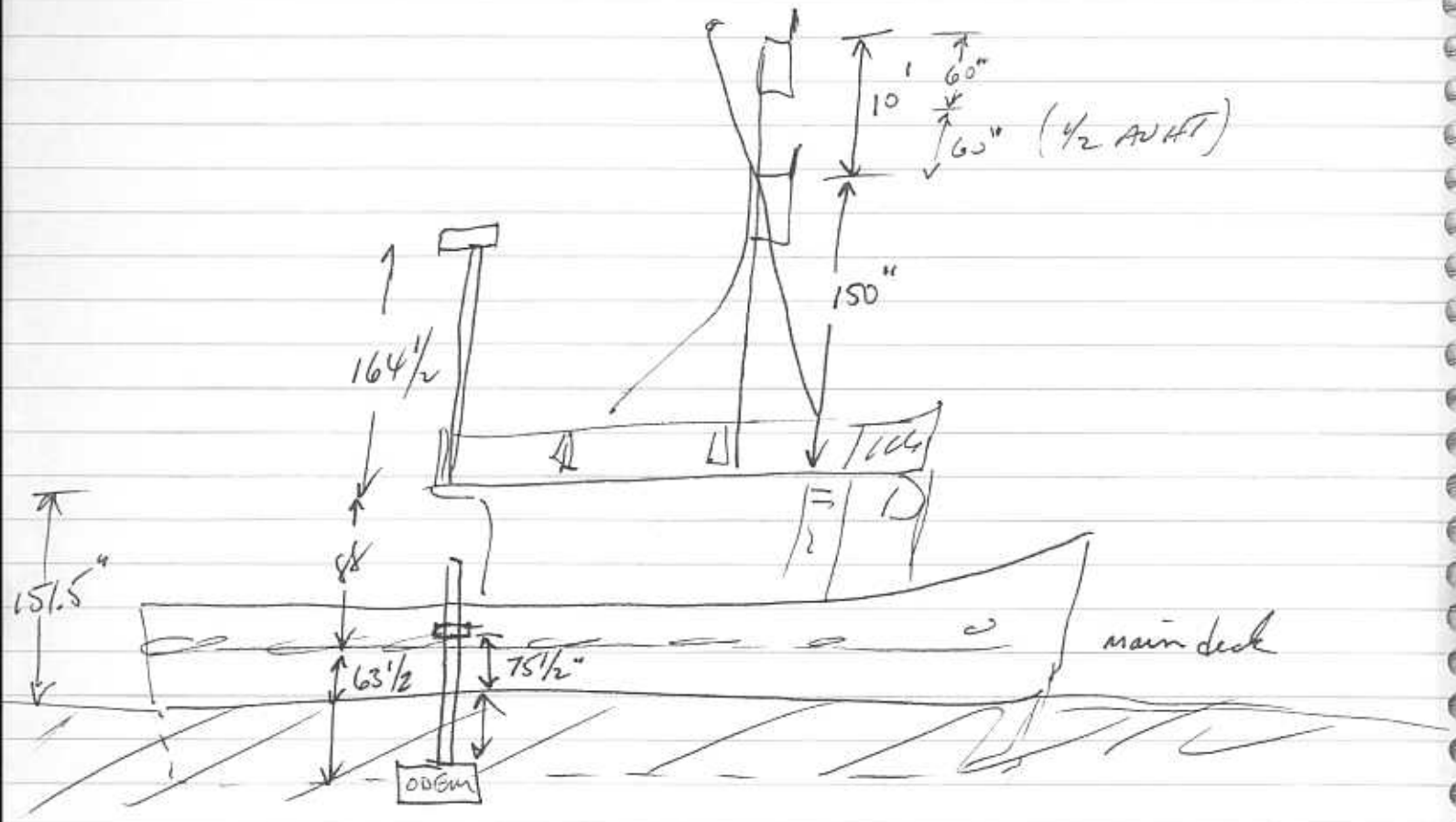

GPS off water 316" = 26.3 ft
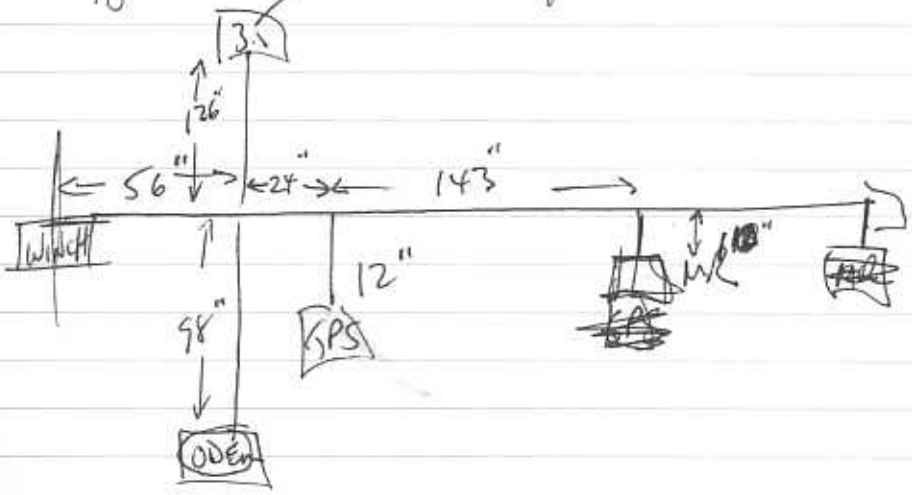
MR off water 361.5" = 30.1 ft